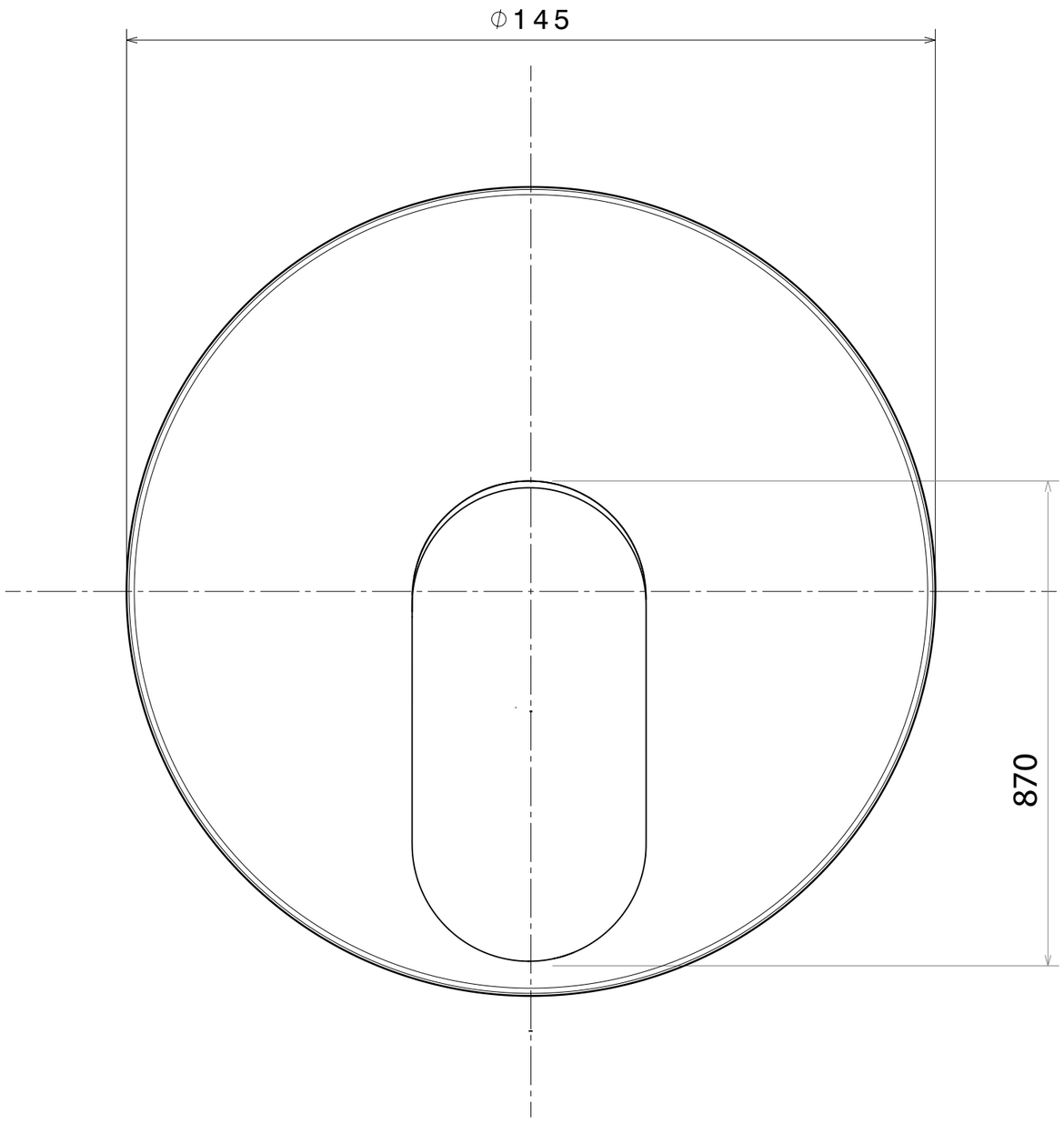
φ145
870

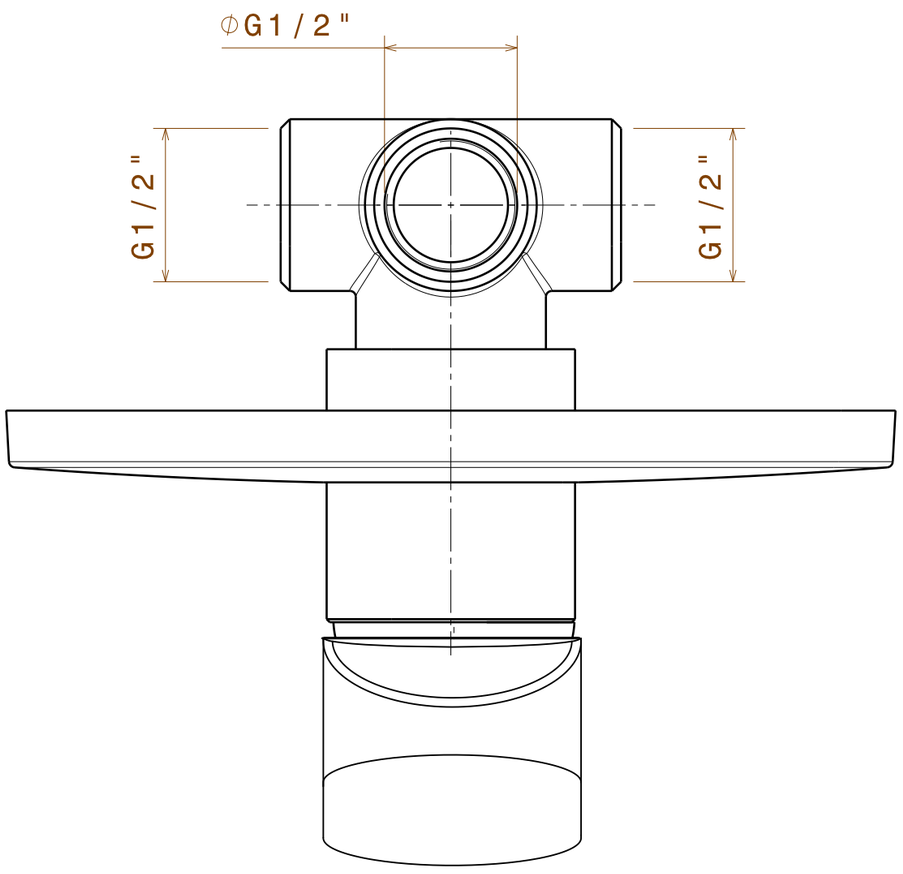
φG1/2"
G1/2"
G1/2"